Vernier Caliper

SERIES 530 — Standard model

FEATURES

- Plain and basic design.
- Can measure OD (outside diameter), ID (inside diameter), depth, and steps.
- The small vernier face angle (14°) provides easy reading.
- Different reading scales on vernier. (metric/inch and inch models only)
- Clamping screw atop the slider.
- Carbide-tipped jaw type calipers are also available.

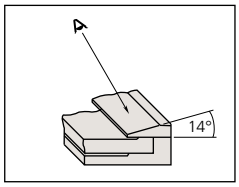

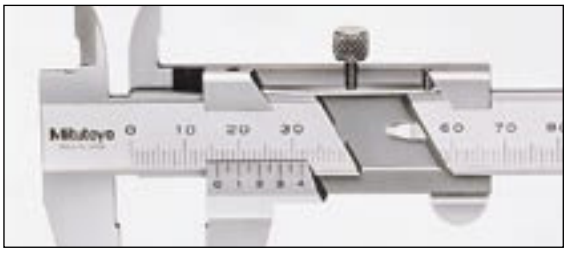

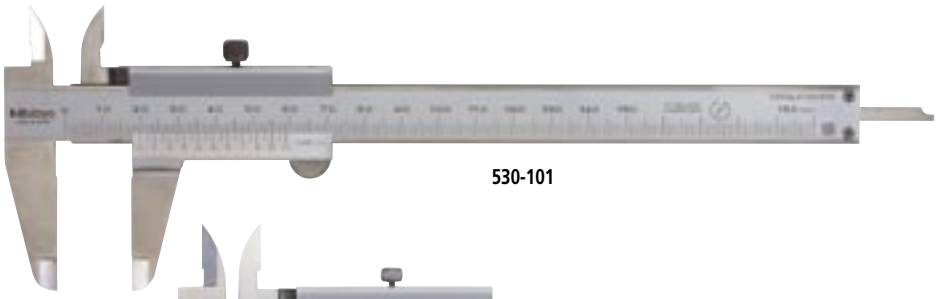

530-101

530-109

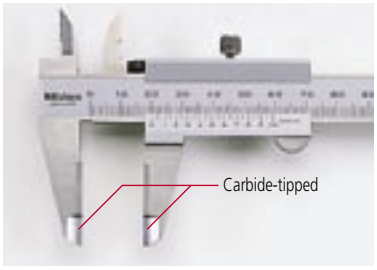

Carbide-tipped jaw type

Round depth bar type

Technical Data

Accuracy:	±0.05mm (≤200mm), ±0.08mm (≤300mm) ±0.10mm (≤600mm), ±0.15mm (≤1000mm) High accuracy type: ±0.03mm (≤200mm), ±0.04mm (≤300mm)
Graduation:	0.05mm, 0.05mm (1/128") or .001" (1/128") High accuracy type: 0.02mm or 0.02mm (.001")

DIMENSION

Unit: mm

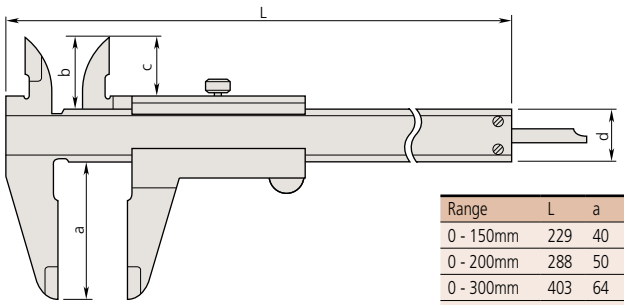

Range	L	a	b	c	d
0 - 150mm	229	40	21	17	16
0 - 200mm	288	50	24.5	20.5	16
0 - 300mm	403	64	27.5	22	20
0 - 600mm	780	90	47	38	25
0 - 1000mm	1240	130	60	50	32

Measurement Applications

OD measurement

ID measurement

Step measurement

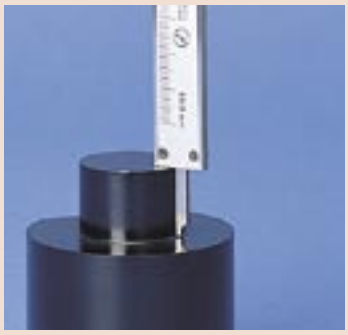

Depth measurement

SPECIFICATIONS

Metric

Range	Order No.	Remarks (depth measuring bar / second scale graduation / others)		
0 - 150mm	**530-102**	ø1.9mm rod	—	—
0 - 150mm	**530-101**	Blade	—	—
0 - 150mm	**530-320**	Blade	—	Carbide-tipped jaws for OD measurement
0 - 150mm	**530-335**	Blade	—	Carbide-tipped jaws for OD & ID measurement
0 - 150mm	**530-319**	Blade	—	Clamping screw below the slider
0 - 150mm	**530-122***	Blade	—	High accuracy model: ±0.03mm
0 - 200mm	**530-108**	Blade	—	—
0 - 200mm	**530-321**	Blade	—	Carbide-tipped jaws for OD measurement
0 - 200mm	**530-123***	Blade	—	High accuracy model: ±0.03mm
0 - 300mm	**530-109**	Blade	—	—
0 - 300mm	**530-322**	Blade	—	Carbide-tipped jaws for OD measurement
0 - 300mm	**530-124***	Blade	—	High accuracy model: ±0.04mm
0 - 600mm	**530-501**	—	—	—
0 - 1000mm	**530-502**	—	—	—

*Graduation: 0.02mm

Metric/Inch

with metric/inch double scale

Range	Order No.	Remarks (depth measuring bar / second scale graduation / others)		
0 - 150mm	**530-104**	Blade	1/128"	—
0 - 150mm	**530-316**	Blade	1/128"	Clamping screw below the slider
0 - 150mm	**530-125**	Blade	1/128"	—
0 - 150mm	**530-312***	Blade	.001"	High accuracy model: ±0.03mm
0 - 200mm	**530-114**	Blade	1/128"	—
0 - 200mm	**530-118***	Blade	.001"	High accuracy model: ±0.03mm
0 - 300mm	**530-115**	Blade	1/128"	—
0 - 300mm	**530-119***	Blade	.001"	High accuracy model: ±0.04mm

*Graduation: 0.02mm

Inch

with inch/inch double scale

Range	Order No.	Remarks (depth measuring bar / second scale graduation / others)		
0 - 6"	**530-105**	Blade	1/128"	—
0 - 6"	**530-314**	Blade	1/128"	Carbide-tipped jaws for OD measurement
0 - 8"	**530-116**	Blade	1/128"	—